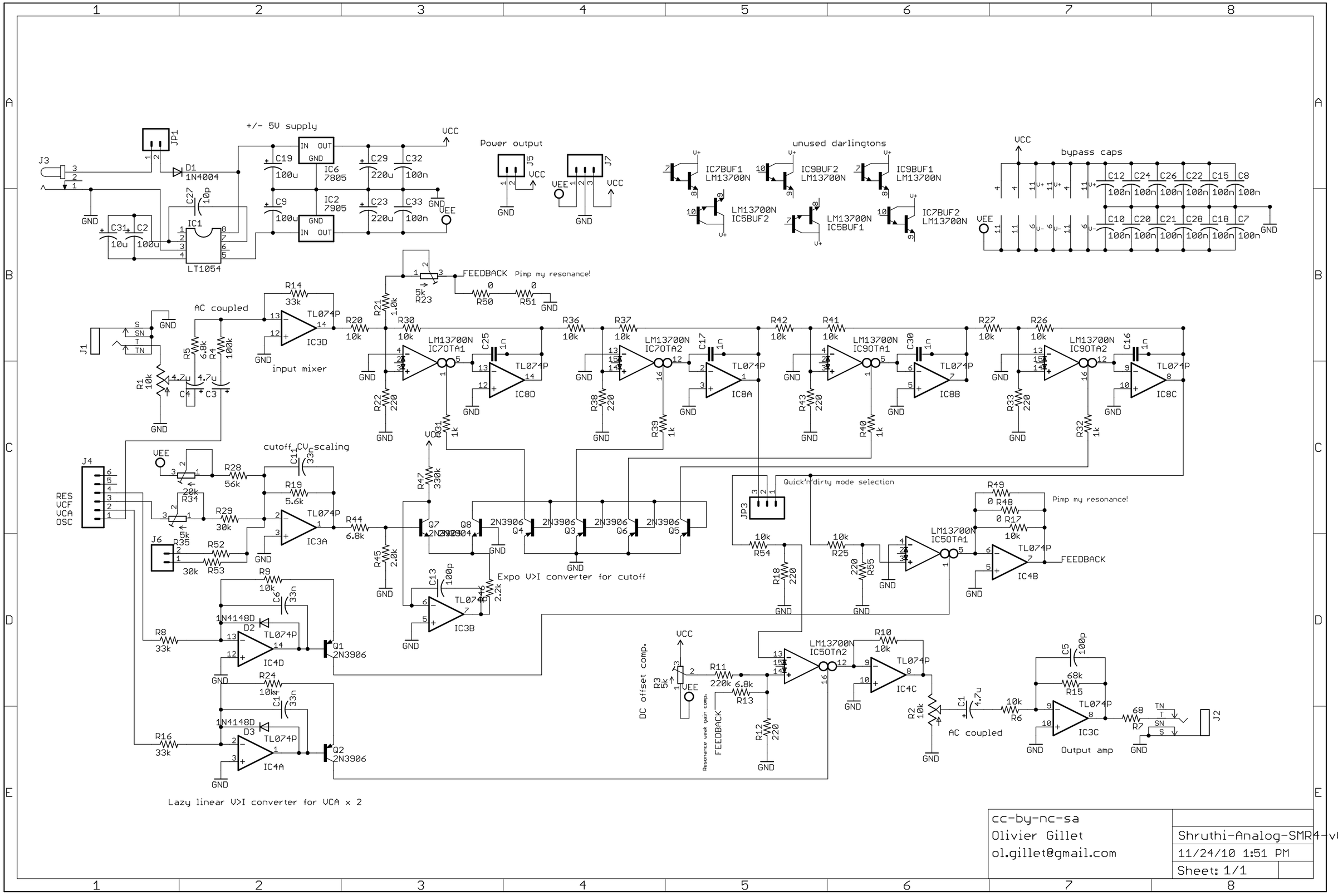
+/- 5V supply
Power output
unused darlingtons
bypass caps
FEEDBACK Pimp my resonance!
AC coupled
input mixer
cutoff CV scaling
Quick'n'dirty mode selection
Pimp my resonance!
Expo V>I converter for cutoff
DC offset comp.
Resonance weak gain comp.
AC coupled
Output amp
Lazy linear V>I converter for VCA x 2
cc-by-nc-sa
Olivier Gillet
ol.gillet@gmail.com
Shruthi-Analog-SMR4-v07
11/24/10 1:51 PM
Sheet: 1/1